REVISIONS				
RevNo	Description	Date	REVISION	Mender
1		2005/05/06	A2	Xwj
2				

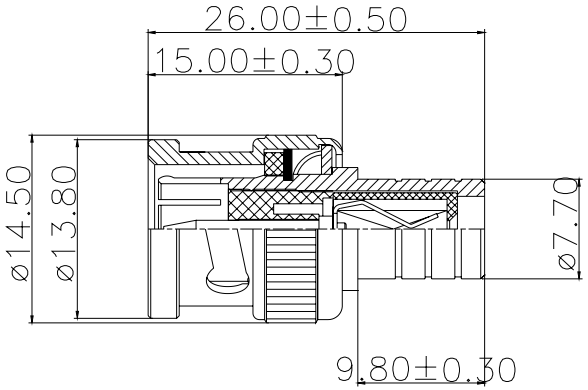

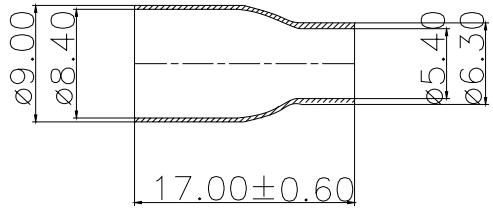

(RG58U)

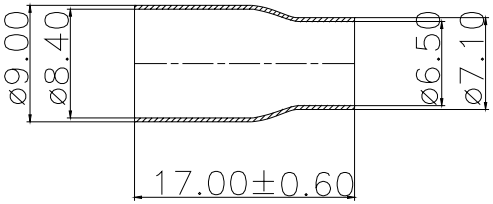

(RG59U)

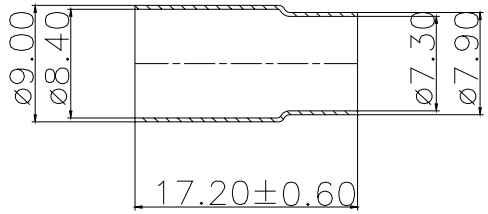

(RG6U)

CRIMPED FERRULE HEX CRIMP SIZE .319"

ITEM	DESCRIPTION	MATERIAL	Q'TY	FINISHED
13	FERRULE	BRASS	1	NICKEL 100u'' Min
12	FERRULE	BRASS	1	NICKEL 100u'' Min
11	FERRULE	BRASS	1	NICKEL 100u'' Min
10	INSULATOR	DELRIN	1	NATURAL
9	CENTER CONTACT	P-BRONZE	1	GOLD 3~5u'' Min
8	CONTACT PIN	BRASS	1	GOLD 3~5u'' Min
7	WASHER	IRON	1	NICKEL 100u'' Min
6	SPRING	SK5	1	NONE
5	RETAINER RING	IRON	1	NICKEL 100u'' Min
4	GASKET	RUBBER	1	RED
3	INSULATOR	DELRIN	1	NATURAL
2	BODY	BRASS	1	NICKEL 100u'' Min
1	SHELL	ZINC	1	NICKEL 100u'' Min

PRODUCT FAMILY	
ITEM	DESC
200-123	MALE+3 FERRULES

SCP Structured Cable Products
Quality Installations Deserve Quality Products

TITLE
BNC MALE QUICK CRIMP TYPE(75 OHM)

	xxx	UNITS	MM	UNLESS OTHERWISE SPECIFIED TOLERANCES: 0.5-15 = ±0.15, 15-30 = ±0.30, 30-120 = ±0.60, >120 = ±1.00 ANGLES ±3°	DESIGNED	Xwj
PART NO.	958	SCALE	FIT		DRAWING	Xwj
MODEL NO.	958				CHECKED	
DRAWING NO.		EDITION	X1	PUBLISH DATE	APPROVED	
CAD FILE	Yin sheng/Yifaxing/xx/xxxxx			2005/03/09	3RD ANGLE	